OX-176

Ultra-Low Phase Noise
Oven-Controlled Crystal Oscillator (OCXO)



Summary

The OX-176 is an ultra-low phase noise, high-stability ovenized crystal oscillator in a 28 × 38 mm package. With close-in phase noise of −118 dBc/Hz @ 1 Hz and a phase noise floor of −170 dBc/Hz, the OX-176 is an excellent choice for all low phase noise applications.

Features

- Temperature stability to 10 ppb
- Standard frequency of 10 MHz
- Sine wave output
- Small package size
- 5e-13 ADEV @ 1 second tau
- Phase noise of −118 dBc/Hz @ 1 Hz and −170 dBc/Hz @ 100 kHz

Applications

- Military radar
- Instrumentation and test equipment
- Synthesizers
- Military communication equipment
- DRO references
- Satellite communications

Phase Noise at 10 MHz, Sine Wave Output			
Frequency Offset (Hz)	**Max**	**Unit**	**Condition**
1	−118	dBc/Hz	Maximum values All EFC settings
10	−145	dBc/Hz	
100	−160	dBc/Hz	
1000	−165	dBc/Hz	
10,000	−168	dBc/Hz	
100,000	−170	dBc/Hz	

Frequency Stabilities1 (Stabilities listed for 10 MHz; for stabilities above 10 MHz, values may degrade, so please contact factory)					
Parameter	**Min**	**Typ**	**Max**	**Units**	**Condition**
vs. Operating Temperature Range (Referenced to +25°C)	−10		+10	ppb	−40°C to +85°C
Initial Tolerance **vs. Supply Voltage Change** **vs. Load Change** **vs. Aging/Day** **vs. Aging/Year (Year 1)** **vs. Aging/Year (following years)**	 −100 −2 −4 −0.2 −100 −30		 +100 +2 +4 +0.2 +100 +30	 ppb ppb ppb ppb ppb ppb	At time of shipment, nominal EFC VS ± 5% Load ± 5% After 7 days operation After 7 days operation
Retrace2	−10		+10	ppb	
Warm-up Time			5	minutes	To ±10 ppb of final frequency (1 hour) @25°C
Supply Voltage (VS)					
Supply Voltage	4.75	5.0	5.25	VDC	Ordering option D
	11.4	12.0	12.6	VDC	Ordering option B
Power Consumption			5.0	Watts	During warm-up, all temperatures
			2.0	Watts	Steady state @ +25°C
RF Output					
Start Time		2		s	Time required to achieve 90% of amplitude
Signal	Sine Wave				
Load		50		Ohm	
Output Power	+5	+7	+9	dBm	VS = 12 VDC
	+4	+6	+8	dBm	VS = 5 VDC
Harmonics			−30	dBc	
Spurious			−80	dBc	

Frequency Tuning (EFC)					
Parameter	**Min**	**Typical**	**Max**	**Units**	**Condition**
Tuning Range	±400		±800	ppb	Fixed frequency option available
Linearity		15		%	
Tuning Slope		Positive			
Input Impedance		100		kOhm	
Bandwidth Modulation	150			Hz	
Control Voltage Range	0.0		4.35	VDC	With Vs = 5.0 VDC
	0.0		10	VDC	With Vs = 12.0 VDC

Additional Parameters						
Parameter	Min	Typical	Max	Units	Condition	
Allan Deviation			5 8 3	E–13 E–13 E–12	1 s tau 10 s tau 100 s tau	@ 10 MHz
g-Sensitivity			1.5	ppb/g		
Weight			25	g		

Absolute Maximum Ratings					
Supply Voltage			6.5	VDC	With VS = 5.0 VDC
			15.0	VDC	With VS = 12.0 VDC
Output Load	25		Open	Ohms	Sine wave
Operable Temperature Range	–55		+95	°C	Operable temperature range implies the device will continue to operate with no long- term damage to unit; however, it will not be specification compliant outside the operating temperature range.

Environmental and Product Classification	
Shock (Endurance)	MIL-STD-202, Method 213, Condition J, 30g, 11 ms
Sine Vibration (Endurance)	MIL-STD-202, Method 201 and 204, Condition A, except 5g to 500 Hz, 1 sweep each axis
Random Vibration (Endurance)	MIL-STD-202, Method 214, Condition I-D
Humidity	MIL-STD-202, Method 103, Condition B, 100% rh
Seal	MIL-STD-202, Method 112, Condition D, hermetic, washable
Altitude	MIL-STD-202, Method 105, sea level to space
Resistance to Soldering Heat	MIL-STD-202, Method 210, Condition A, B, C
Terminal Strength	MIL-STD-202, Method 211, Condition C (5 bends at 45°, 2 lbs)
Moisture Sensitive Level	1
RoHS	6 compliant
Storage Temperature Range	−55°C to +125°C

Outline Drawing/Enclosure

Dimensions in mm

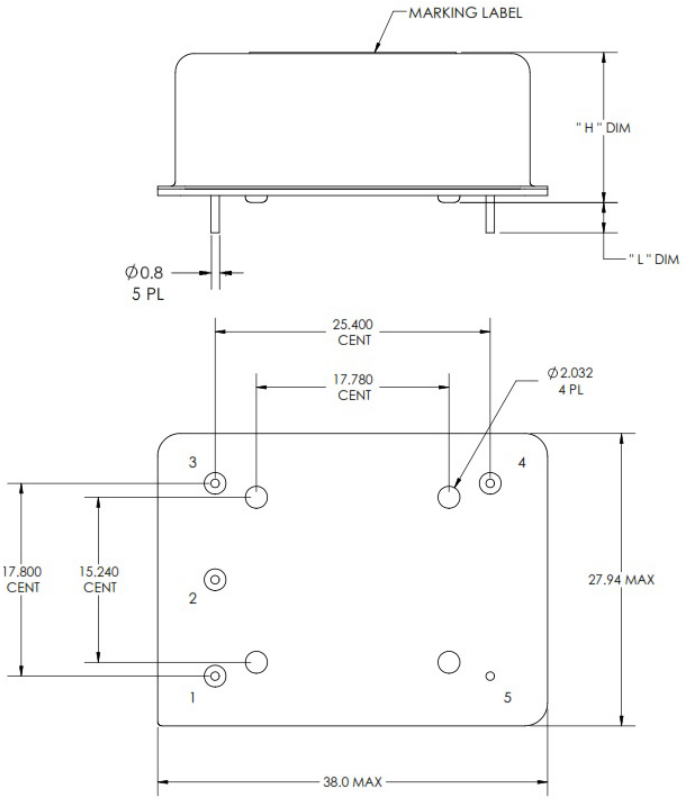

Through Hole Package configuration A	
Height "H"	**Pin Length "L"**
18.2 mm max	4.5 mm min

Pin Connections	
1	Electronic Frequency Control (EFC) No Connect for fixed-frequency oscillators
2	No connect
3	Supply voltage input (Vs)
4	RF output
5	Ground (case)

Ordering Information3

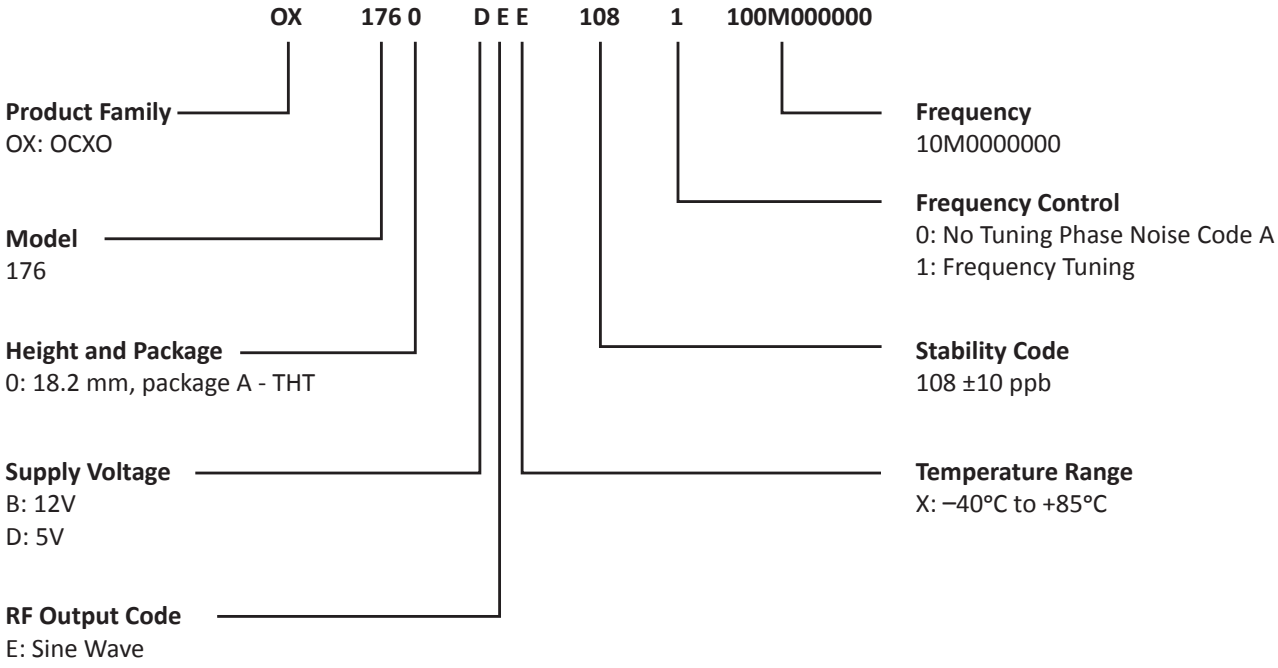

Design Tools

Microchip stocks the following evaluation board for this product:

OCXO Evaluation Board

Notes:

1. Unless otherwise stated, all values are valid after warm-up time and refer to typical conditions for supply voltage, frequency control voltage, load and temperature (25°C)
2. Retrace is defined as f1−fo, where fo is the reading after the unit has been on power for 24 hours, and f1 is the frequency after it is off for 24 hours followed by on for 60 minutes
3. Not all options and codes available at all frequencies

Technical Support

North and South America

Microchip Technology Inc.
FTS Group
3870 North First Street San Jose, CA 95134-1702
Toll-free in North America: 1-888-367-7966, option 3
Telephone: 408-428-7907
Email: SJO-FTD.Support@microchip.com
Web: https://microchipsupport.force.com/s/

Europe, Middle East and Africa

Microchip FTS EMEA
Altlaufstrasse 42
85635 Hoehenkirchen-Siegertsbrunn Germany
Telephone: +49 700 3288 6435
Email: FTD.EMEASupport@microchip.com
Web: https://microchipsupport.force.com/s/

Asia

Microchip Technology India Pvt. Ltd.
Phase 1, Plot No. 149/B, Block A, EPIP,
Whitefield, Industrial Area, Bengaluru 560066,
Karnataka, India
Email: SJO-FTD.Support@microchip.com
Web: https://microchipsupport.force.com/s/

The Microchip name and logo and the Microchip logo are registered trademarks of Microchip Technology Incorporated in the U.S.A. and other countries. All other trademarks mentioned herein are property of their respective companies.
© 2026, Microchip Technology Incorporated and its subsidiaries. All Rights Reserved. 2/26